GRUNER
SWITCH TO INNOVATIONS

Technical data sheet

363-230-40
Rotary actuator

Description

Rotary actuator for adjusting dampers in HVAC installations

- Running time 150 s / 90°
- Torque 40 Nm
- Nominal voltage 230 VAC/DC
- Control 2-/3-point
- Damper size up to approx. 8 m²
- Shaft coupling clamp ◊ 9-18 mm/ Ø 9-26 mm

Technical data

Electrical data	Nominal voltage	230 VAC/DC, 50/60 Hz
	Nominal voltage range	85...265 VAC/DC
	Power consumption motor (motion)	5,5 W
	Power consumption standby (end position)	1,5 W
	Wire sizing	10,0 VA
	Control	2-/3-point
	Feedback signal	-
	Auxiliary switch	-
	Contact load	-
	Switching point	-
	Connection motor	cable 1000 mm, 3 x 0,75 mm² (halogen free)
	Connection feedback potentiometer	-
	Connection auxiliary switch	-
	Connection GUAC	-
Functional data	Torque	40 Nm

2023-10-04 08:49:48 • Copyright by GRUNER AG • Subject to change in technology and Design

GRUNER AG
P.O. Box 1149 | 78564 | Wehingen
Tel: +49 7426 948-0 | Fax: +49 7426 948-200 | www.gruner.de | info@gruner.de

Technical data

Functional data	Damper size	up to approx. 8 m²
	Synchronized speed	±5%
	Direction of rotation	selected by switch
	Manual override	gearing latch disengaged with pushbutton, self-resetting
	Angle of rotation	0°...max. 95° can be limited with adjustable mechanical end stops
	Running time	150 s / 90°
	Sound power level	< 45 dB(A)
	Shaft coupling	clamp ◊ 9-18 mm / Ø 9-26 mm
	Position indication	mechanical with pointer
	Service life	> 60 000 cycles (0°...95°...0°)
Safety	Protection class	II (double insulation)
	Degree of protection	IP 54
	Cable mounting type	
	EMC	CE (2014/30/EU)
	LVD	CE (2014/35/EU)
	RoHS	CE (2011/65/EU - 2015/863/EU - 2017/2102/EU)
	Mode of operation	Typ 1 (EN 60730-1)
	Rated impulse voltage supply / control	4 kV (EN 60730-1)
	Control pollution degree	3 (EN 60730-1)
	Ambient temperature normal operation	−30°C...+50°C
	Storage temperature	−30°C...+80°C
	Ambient humidity	5...95% r.H., non condensing (EN 60730-1)
	Maintenance	maintenance free
Dimensions / Weight	Dimensions	193 x 96 x 60 mm
	Weight	1600 g

2023-10-04 08:49:48 • Copyright by GRUNER AG • Subject to change in technology and Design

GRUNER AG
P.O. Box 1149 | 78564 | Wehingen
Tel: +49 7426 948-0 | Fax: +49 7426 948-200 | www.gruner.de | info@gruner.de

Functionality / Properties

Operating mode

2 point:
Connect power supply to wire 1+2, actuator drives to position 1. Is also wire 3 connected to the power supply, actuator drives to position 0.

3 point:
Connect power supply to wire 1+2, actuator drives to position 1. Is wire 1+3 connected to the power supply, actuator drives to position 0.

The actuator is overload-proof, requires no limit switches and automatically stops, when the end stop is reached.

Direct mounting

Simple direct mounting on the damper shaft with a clamp, protection against rotating with enclosed anti-rotation lock or rather at intended attachment points.

Manual override

Manual override with self-resetting pushbutton possible (the gear is disengaged as long as the button is pressed).

Mode switch

DIP switch under the case cover

R / CW: rotary direction right / clockwise
L / CWW: rotary direction left / counter clockwise

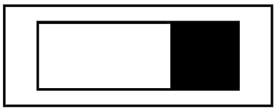

L / CCW R / CW

Connector / Security Note

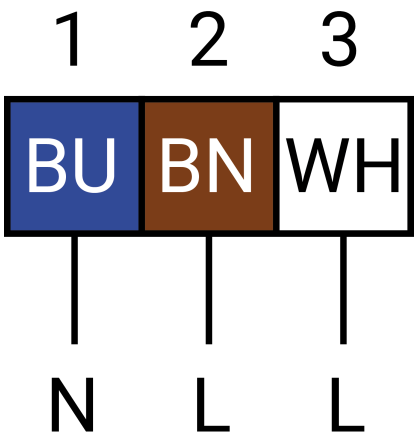

Safety remarks

- Caution: power supply voltage!
- The device is not allowed to be used outside the specified field of application, especially in airplanes.
- It may only be installed by suitably trained personnel. Any legal regulations or regulations issued by authorities must be observed during assembly.
- The device may only be opened at the manufacturer´s site.
- The device is not allowed to be disposed of as household refuse. All locally valid regulations and requirements must be observed.
- When calculating the required torque, the specifications supplied by the damper manufacturer´s (cross-section, design, installation site), and the air flow conditions must be observed.

2023-10-04 08:49:48 • Copyright by GRUNER AG • Subject to change in technology and Design

GRUNER AG
P.O. Box 1149 | 78564 | Wehingen
Tel: +49 7426 948-0 | Fax: +49 7426 948-200 | www.gruner.de | info@gruner.de

Technical Drawing

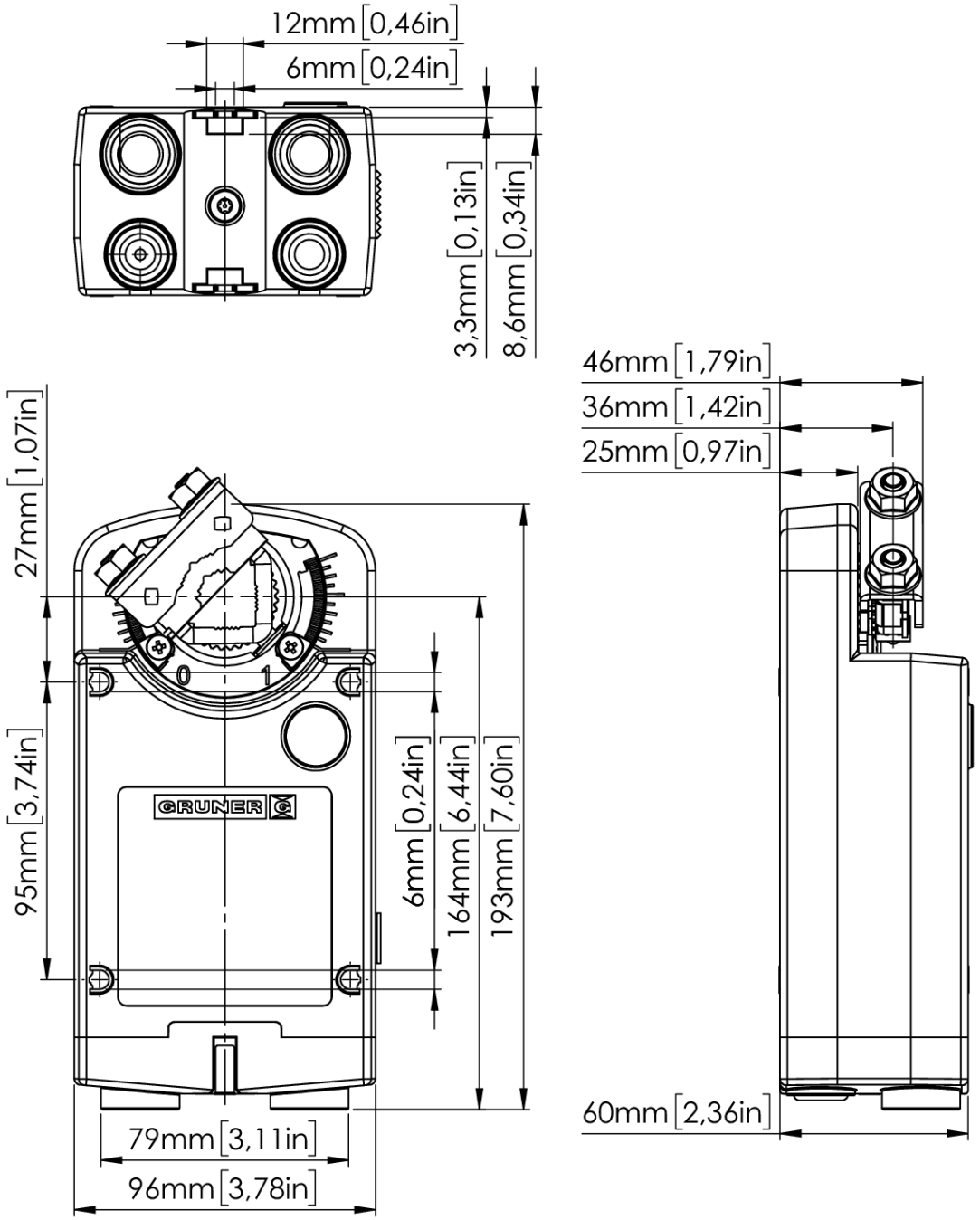

2023-10-04 08:49:48 • Copyright by GRUNER AG • Subject to change in technology and Design

GRUNER AG
P.O. Box 1149 | 78564 | Wehingen
Tel: +49 7426 948-0 | Fax: +49 7426 948-200 | www.gruner.de | info@gruner.de